EMTS
Telecom Services
TURNING TECHNOLOGY INTO SOLUTIONS

DMR-TETRA
40dBm High Performances
In-Line Booster

Model No: ILB-850-40W50

Features:

- Compensate loss of passive components and transmission losses of feeder cables.
- Used for Indoor Distributions or Tunnel Coverage.
- Advanced Bi-Directional Technology.
- 40dBm composite power types, meet mobile technology standards.
- Supports all combinations of DMR and LTE at the 800 MHz band
- Provide quick RF coverage service to your DMR Network.
- Compact Size and High Performance in a waterproof enclosure suitable for outdoor and indoor installations
- Metal cavity filter technology allows wider receiving and transmitting separation, gain flatness, higher stability, and lower noise figure.
- Wi-Fi or USB port provides a link to a notebook for local supervision and an option for built-in wireless modem(LTE) or Intranet connectivity to communicate with the NMS (Network Management System),

Introduction

The EMTS LMR/PMR In Line Booster (ILB) provides an excellent solution to the problem of insertion loss of passive components and transmission losses of feeder cables for Indoor Distributions or Tunnel Coverage. Using the ILB the LMR/DMR operator can easily expand a base station's service area by compensation for feeder losses. The ILB amplifies the signals on the coax cables or leaky cables by using Advanced Bi-Directional Technology. Easy installation, lightweight design, and very friendly GUI make our ILB easy to use and install. The EMTS ILB is a cost-effective and practical solution for extending signal coverage inside buildings, shopping malls, airports, and tunnels where the LMR/DMR networks have poor coverage. The ILB is used to extend the coverage area in a passive distribution antenna system (DAS) connected by coaxial cables.

System Block Diagram

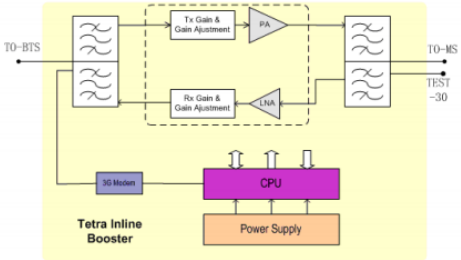

EMTS Telecom Services offers a comprehensive portfolio of enhanced coverage solutions for Wireless Networks, Based on advanced technologies. **EMTS-proven**, indoor, and outdoor solutions solve a wide range of network challenges including interference and oscillation problems, challenging coverage holes, rapid response deployment, and inadequate in-building coverage. Regardless of the technology or frequency, **EMTS** can provide customized coverage solutions that address any combination of unique and complex network needs for Wireless Networks.

EMTS ILB provides a wide range of configurations to address different customer requirements.

Technical Specifications

	Downlink	Uplink
Electrical Specifications		
Frequency Range *** Please specify uplink and downlink bands**	824-849 MHz	869-894 MHz
Composite output Power	40dBm	24dBm
Gain	50±3dB	48±3dB
In-band ripple	≤3dB	
Gain adjustable range	≥30dB	
Gain adjustable step	1dB	
Noise figure	≤4dB	
VSWR	≤2:1	
Transmission delay	≤5us	
Spurious	≤-36dBm (9KHz to 1GHz) ≤-30dBm (1GHz to 12.5GHz)	
External connection		
Connector	N-F / 50 ohms	
Alarm Detection	HPA, LNA, TEMP, PSU, Digital IF module, Door Local LED display, Dry Contacts; RS232 local monitoring	
Local Alarm;	Via USB connectivity using web browser PSU, HPA, LNA, Digital IF Module, Temp, Door open	
NMS interface	Using ethernet connectivity or 4G modem or dry contact for summarized alarm	
Power Supply	110 to 220VAC ±15% 50-60Hz / 120 Watts **Optional 24 Vdc or -48 Vdc**	
Environmental		
Operating Temperature Range	-20 to +55 °C	
Cooling	Convection	
Environmental Sealing	IP65	
Operating Humidity	Up to 95% (non-condensing)	
Complies with	EN 301 489-18, ETSI TS 101 789-1, EN 60 950	
Standards	460x370x190 mm	
Weight	28kg	

About EMTS Telecom Services Ltd.:
EMTS is a leading supplier of high-quality RF coverage solutions designed to maximize wireless network coverage in difficult RF environments and complex settings. The company specializes in extending RF radio coverage to rural areas, office buildings, subways, tunnels, and shadowed areas. The EMTS coverage solution supports all major mobile technologies and standards of wireless Networks.

All rights reserved.

EMTS
Telecom Services
TURNING TECHNOLOGY INTO SOLUTIONS

Application Sketch Map

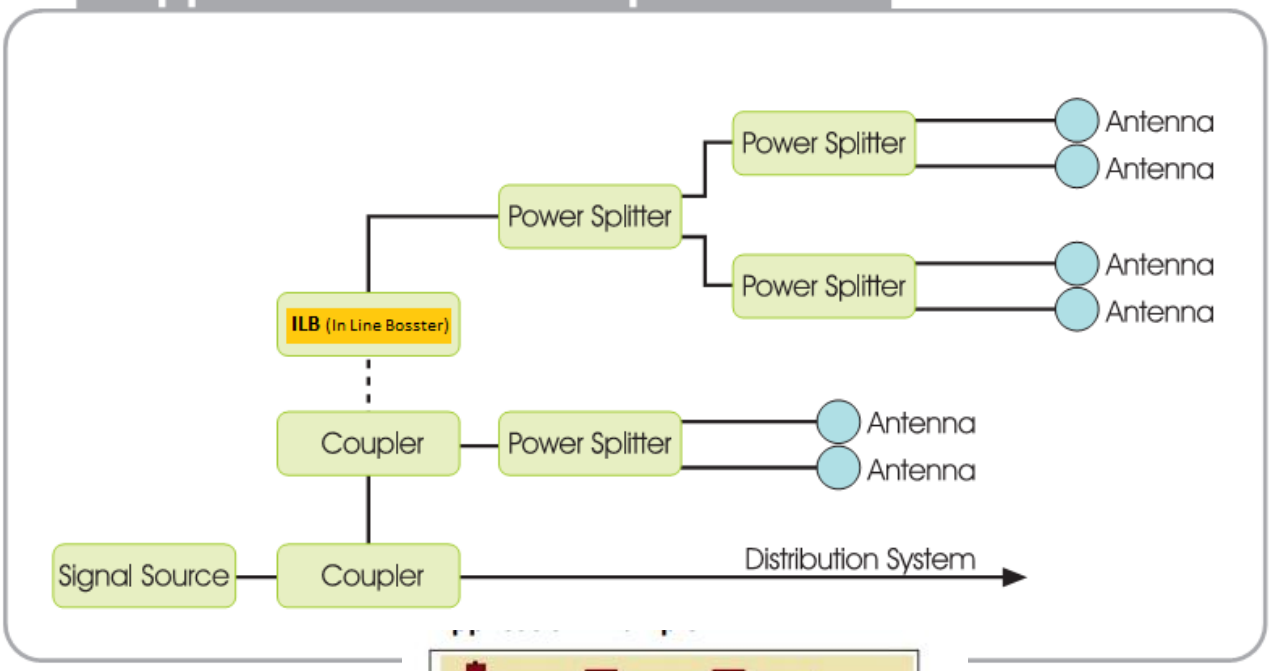

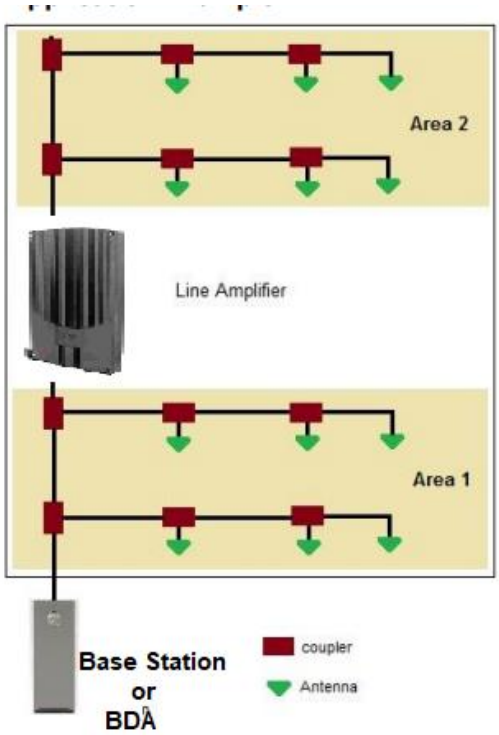

EMTS Telecom Services offers a comprehensive portfolio of enhanced coverage solutions for Wireless Networks, Based on advanced technologies. **EMTS-proven**, indoor, and outdoor solutions solve a wide range of network challenges including interference and oscillation problems, challenging coverage holes, rapid response deployment, and inadequate in-building coverage. Regardless of the technology or frequency, **EMTS** can provide customized coverage solutions that address any combination of unique and complex network needs for Wireless Networks.