40dBm Dual-Band 1800-3500MHz 4G/5G Digital High Power Repeater

Model No: DHPR-1835-40W95

Features:

- Dual-Band with SW defined filter supporting spectrum reframing
- Very low NF with an excellent EVM
- IMOP Support (Isolation Measurement and Oscillation Protection)
- Supports 4G & 5G (NSA+SA modes) in the same unit
- 5G sync module ensures precise synchronization with the donor base station
- Digital bandwidth adjustable with one sub-band at N78 and 3 sub-bands at B3
- Utilizing intelligent algorithm to prevent UL interference
- Fully comply with ETSI & 3GPP standards with 40dBm composite power per band
- User-friendly GUI for the local setting via mobile app. or laptop
- Setting via EMTS mobile application using Wi-Fi connectivity or via USB

Introduction

The EMTS Telecom Services dual-band 1800/3500MHz Digital High-Power Repeaters (DHPR) offer an excellent solution for addressing poor signal coverage, and is suitable for both coverage extension and indoor applications.

This product line repeaters are designed to support dual-band 1800MHz FDD and 3500MHz TDD frequencies, accommodating both LTE and 5G technologies.

Equipped with an intelligent algorithm, the DHPR minimizes potential uplink interference and includes an isolation detection function to alert users when the distance between donor and service antennas is insufficient. Its easy installation and friendly GUI makes the DHPR an outstanding choice for enhancing signal strength, thereby improving the coverage and capacity of LTE/5G networks.

The EMTS DHPR enhances mobile network capacity and data coverage in areas with weak signals. It provides a cost-effective solution for indoor signal issues caused by architectural obstacles and signal attenuation. The simplicity of installation and maintenance ensures a quick return on investment for carriers.

The DHPR employs advanced digital technology, accessible via EMTS Mobile Apps or a direct USB connection. It features cutting-edge RF technology and digital modules to reduce power consumption and increase the MTBF's reliability, incorporating an IMOP algorithm to prevent self-oscillation, ensuring stable and reliable performance.

EMTS Telecom Services Ltd. offers a comprehensive portfolio of enhanced coverage solutions for the Wireless Networks, Based on advanced technologies. EMTS proven, indoor and outdoor solutions solve a wide range of network challenges including interference and oscillation problems, challenging coverage holes, rapid response deployment and inadequate in-building coverage. Regardless of the technology or frequency, EMTS can provide customized coverage solutions that address any combination of unique and complex network needs for the Wireless Networks.

EMTS Telecom Services

TURNING TECHNOLOGY INTO SOLUTIONS

Technical Specifications:

Electrical Specifications

		B3 (1800)	N78 (3500)
Frequency Range	Uplink	1710 - 1785 MHz (adjustable)	3300 - 3600 MHz (adjustable)
	Downlink	1805 - 1880 MHz (adjustable)	3300 - 3600 MHz (adjustable)
Number of Sub-bands		1-3	1
Bandwidth		≦ 75 MHz (adjustable)	≦ 100 MHz (adjustable)
Max. Gain	Uplink	≧ 90±2 dB	≧ 90±2 dB
	Downlink	≧ 95±2 dB	≧ 95±2 dB
Manual Gain Control		31 dB in the step of 1 dB	
Automatic Gain Control		≧ 20 dB	
Gain Flatness (per sub-band)		≦ ±1.5 dB	≦ ±2 dB
Max. Input Power Without Damage		0 dBm	
Output Power	Uplink	≧ 27±1 dBm	≧ 27±1 dBm
	Downlink	≧ 40±1 dBm	≧ 40±1 dBm
Out of Band Gain		Comply with 3GPP	Comply with 3GPP
Spurious Emission	9KHz-1GHz	≦ -36dBm	
	1GHz-12.75GHz	≦ -30dBm	
ACRR	±20/100MHz	≦-36dBc/30KHz	≦-36dBc/30KHz
	±40/200MHz	≦-40dBc/30KHz	≦-40dBc/30KHz
EVM		≦ 8%	≦ 3.5%
Frequency Stability		≦ ±0.01 ppm	≦ ±0.01 ppm
Noise Figure		≦ 6 dB	
VSWR		≦ 1.5	
System Delay		≦ 4.5 µs	
RF Connector		N-Female	
Impedance		50 Ω	
Power Supply		AC 90-240 V, 50/ 60 Hz	
Power Consumption		≦ 230 W	

About EMTS Telecom Services Ltd.:
EMTS Telecom Services is a leading supplier of high-quality RF coverage solutions designed to maximize wireless network coverage in difficult RF environments and complex settings. The company specializes in extending RF radio coverage to rural areas, office buildings, subways, tunnels and shadowed areas. The EMTS coverage solution supports all major mobile technologies and standards of wireless Networks.

All rights reserved - Note: All specifications subject to change without notice

EMTS Telecom Services

TURNING TECHNOLOGY INTO SOLUTIONS

Mechanical & Environmental Specifications	
Dimensions	450*315*180 mm
Weight	≤25kg
Mounting Kit	Included Wall / Pall
Grounding kit	Included
Operating temperature	-20º to +55℃
Standard against dust and water	IP65
Relative humidity	≤95%
RF connectors	N-Type (optional 7/16 DIN Female or 4.3-10)
MTBF (Mean time between failures)	≥ 100000 hours
Monitoring	
Operation Configuration	LED Display for status and alarm, PC RJ45Port, Local WIF functionality for easy setting and alarming
Remote Monitoring and Alarm (optional)	NMS via internal 3G/4G modem, Supports SMS/SNMP real-time status and alarm reporting Remote configuration
Certification and standards	
Standard	Comply with CE and ETSI Standards: Safety: EN 60950 EMC : ETSI 301 489-50, ETSI 301 489-1, Radio: ETSI 301 908-11, ETSI 301 908-15 and ETSI TS 136 106 V15.0.0 / ETSI TS 136 143 V15.0.0
Certification	CE Comply

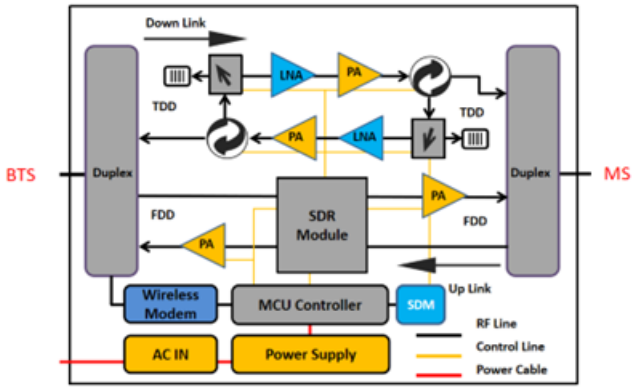

EMTS Telecom Services Ltd. offers a comprehensive portfolio of enhanced coverage solutions for the Wireless Networks, Based on advanced technologies. EMTS proven, indoor and outdoor solutions solve a wide range of network challenges including interference and oscillation problems, challenging coverage holes, rapid response deployment and inadequate in-building coverage. Regardless of the technology or frequency, EMTS can provide customized coverage solutions that address any combination of unique and complex network needs for the Wireless Networks.